5M Mühendislik

5M Mühendislik

Mümessillik Danışmanlık Ltd. Şti.

IS BRAND NAME OF 5M MUHENDISLIK LTD. STI.

bilgi ve deneyim...

knowledge and experience...

5M Mühendislik, 1996 yılında beş mühendis tarafından kurulmuştur.

1999 yılında filtre sektöründe üretim yapmaya başlayan firmamız, Alman GEA Delbag firmasının Türkiye temsilciliğini 2000 yılından beri yapmaktadır. 5M Mühendislik, 2008 yılında Bursa Hasanağa Sanayi Bölgesindeki binasına taşınmış ve üretimini arttırarak faaliyetlerine devam etmektedir.

5M Mühendislik is a Turkish Company that Manufactures Air Filters. In the production line you can find Panel, Bag, Hepa, Compact, Activated Carbon, High Temperature, Metal and Fan Coil Filters are designed to solve of all our costomers' requirements.

Müşterilerimizin ihtiyaçlarını karşılamak üzere tasarlanmış filtrelerimiz aşağıdaki sektörlerde kullanılmaktadırlar.

TAF Filters are designed to solve all our customers requirements and specially used by;

- Tüm HVAC Sistemleri
- İlaç Endüstrisi
- Hastaneler
- Otomotiv Endüstrisi
- Elektrik Enerjisi Üretimi
- Gıda Endüstrisi
- Elektronik
- Kimya Endüstrisi
- Tekstil Endüstrisi
- Bina ve Alışveriş Merkezleri

- All HVAC Units
- Pharmaceutical Industry
- Medicine (Hospitals)
- Automotive Industry
- Power Plants
- Food Industry
- Electronic
- Chemical Industry
- Textile Industry
- Buildings and Malls

İçindekiler / Index

Filtre Süzücü Elemanları
Roll Filters — 04/05

Kaset Filtreler
Panel Filters — 06/07

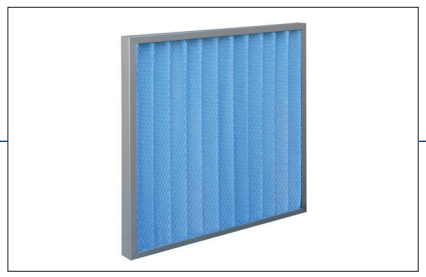

Metal Filtreler
Metal Filters — 08/09

Torba Filtreler
Bag Filters — 10/11

Kompakt Filtreler
Compact Filters — 12/13

MDF Hepa Filtreler
MDF Hepa Filters — 14/15

Alüminyum Hepa Filtreler
Aluminium Hepa Filters — 16

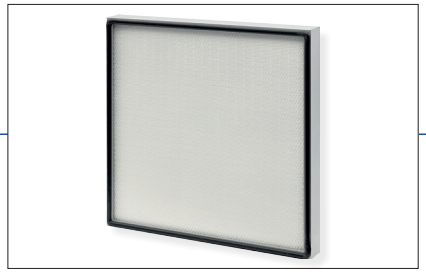

Metal Hepa Filtreler
Metal Hepa Filters 17

Jel Contalı Hepa Filtreler
Gel Gasket Hepa Filters 18

V-Modül Hepa Filtreler
V-Modul Hepa Filters 19

Terminal Hood Hepa Filtreler
Terminal Hood Hepa Filters 20

Alüminyum Seperator Hepa Filtreler
Aluminium Seperator Hepa Filters 21

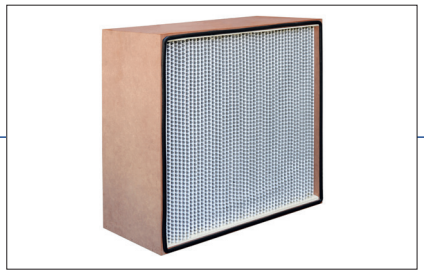

Aktif Karbon Kompakt Filtreler
Activated Carbon Compact Filters 22

Aktif Karbon Kartuş Filtreler
Activated Carbon Cartridges Filters 23

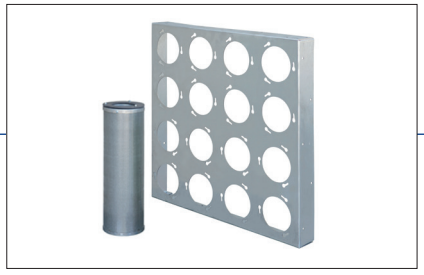

Sertifikalar
Certificates 24

FİLTRE SÜZÜCÜ ELEMANLARI
ROLL FILTERS

G2 / G3 / G4

RM - G4 - 250 - 1000 - 20000 - T20

- Filter Type RM:Roll Media
- Filter class (EN 779) G2-G3-G4
- Weight (g/m^2)
- Width (mm)
- Lenght (mm)
- Thickness (mm)

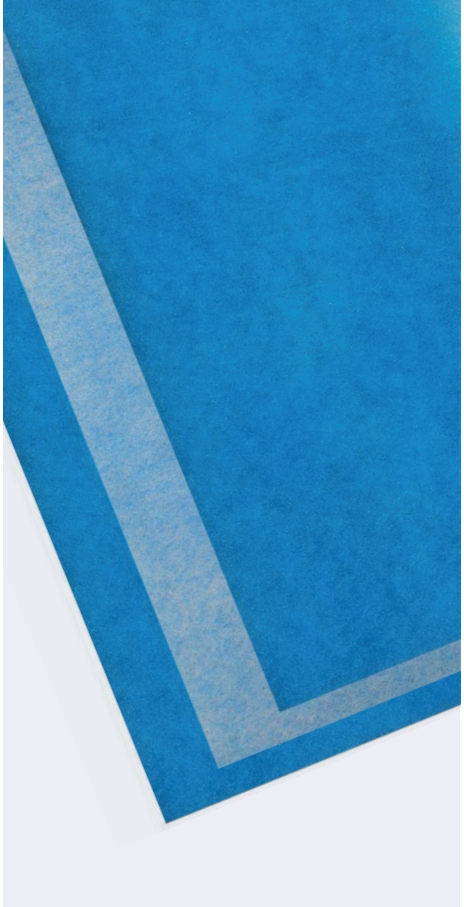

Özellikler :
- %100 Polyester
- Yüksek Toz Tutma
- Düşük Fark Basıncı

Uygulamalar :
Ön Filtre Olarak
- Tüm Havalandırma Sistemleri

Specifications :
- 100 % Polyester
- Progressive Media Structure
- High Dust Holding Capacity

Applications :
Pre-Filtration
- All HVAC Units

Filter Values
(Acc. to EN 779)

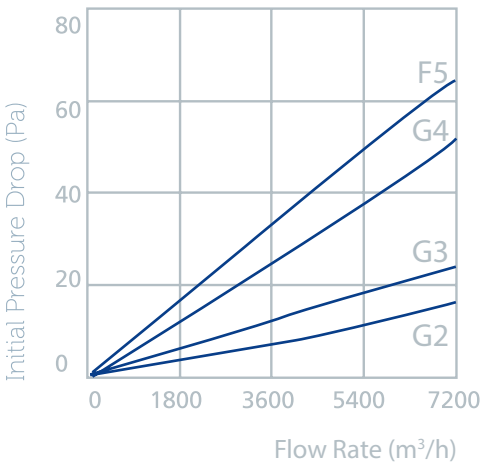

	G2	G3	G3	G4
Av. Arrestance (%)	72,0	81,4	87,7	91,7
Av. Efficiency	-	-	-	-
Final Pressure Drop (Pa)	250	250	250	250
Operating Temp. (°C)	80	80	80	80
Material Thickness	5	10	18	20

KASET FİLTRELER
PANEL FILTERS

G2 / G3 / G4

Product Code	Filter Class (EN 779)	Dimensions			Media Area (m^2)	Air Volume (m^3/h)	Initial Pressure Drop (Pa)
		W (mm)	H (mm)	D (mm)			
P-Z-G4-PE-G-592x592x48	G4	592	592	48	0.72	3400	30
P-Z-G4-PE-G-490x592x48	G4	490	592	48	0.66	3000	30
P-Z-G4-PE-G-287x592x48	G4	287	592	48	0.36	1700	30
P-Z-G4-PE-G-287x287x48	G4	287	287	48	0.18	850	30

P - Z - G4 - PE - G - 592x592x48

Filter Type:
P: Panel Filter

Media Type:
S: Straight Z: Z-line

Filter Class (EN779):
G2 - G3 - G4

Width x Height x Depth
(mm) (mm) (mm)

Frame Type:
G : Galvanised C : Cardboard

Media Material:
PE: Polyester PU: Polyurethane GF: Glass Fiber

Özellikler :
- Yüksek Toz Tutma
- Düşük Fark Basıncı
- Metal Destek

Uygulamalar :
Ön Filtre Olarak
- Boya Kabinleri
- Enerji Üretim Santralleri

Specifications :
- Progressive Structure Towards the Clean Air Side
- High Dust Holding Capacity
- Low Differential Pressure Drop
- Support Grid
- Various Frame Size and Depths With any Dimensions

Applications :
Pre-Filtration
- All HVAC Units
- Spray Paint Booths
- Power Plants

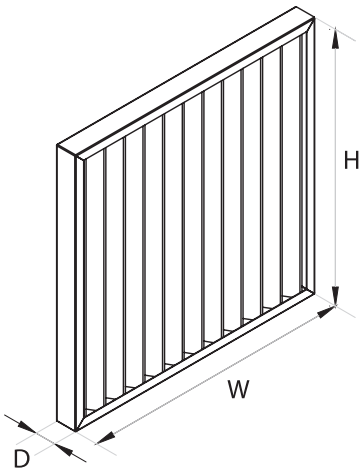

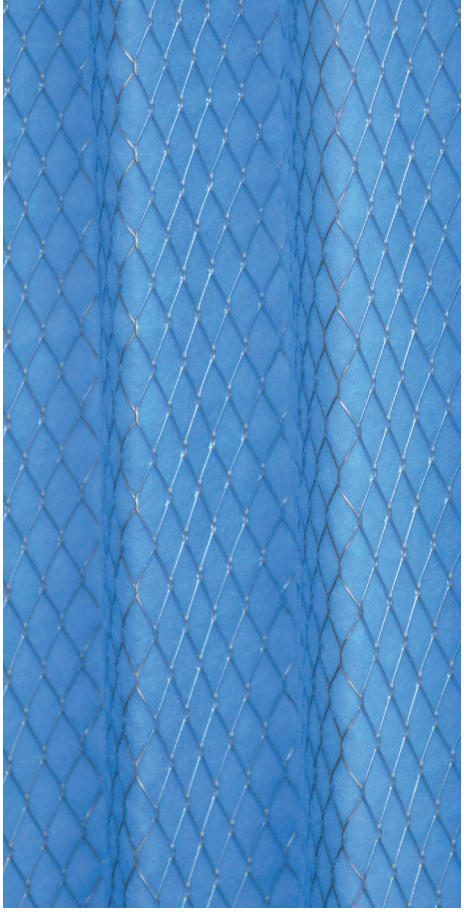

Filter Values
(Acc. to EN 779)

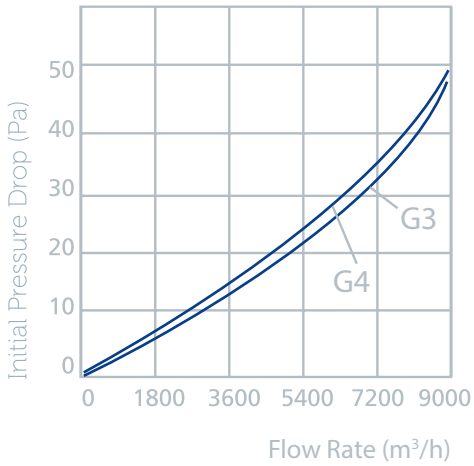

	G3	G4
Av. Arrestance (%)	87,7	92,2
Av. Efficiency	-	-
Final Pressure Drop (Pa)	250	250
Operating Temp. (°C)	80	80
Filter Depth	48-100	48-100

METAL FİLTRELER
METAL FILTERS

G2 / G3

Product Code	Filter Class (EN 779)	Dimensions			Media Area (m^2)	Air Volume (m^3/h)	Initial Pressure Drop (Pa)
		W (mm)	H (mm)	D (mm)			
M-Z-G3-AW-G-592x592x48	G3	592	592	48	0.72	3400	30
M-Z-G3-AW-G-490x592x48	G3	490	592	48	0.66	3000	30
M-Z-G3-AW-G-287x592x48	G3	287	592	48	0.36	1700	30
M-Z-G3-AW-G-287x287x48	G3	287	287	48	0.18	850	30

M - Z - G3 - AW - G - 592x592x48

Filter Type:
M: Metal Filter

Width x Height x Depth
(mm) (mm) (mm)

Media Type:
S: Straight Z: Z-line

Frame Type:
G : Galvanised A : Aluminium S : Stainless Steel

Filter Class (EN779):
G2 - G3

Media Material:
AW: Aluminium Wire Mesh AE: Alu. Expanded Mesh

Özellikler :
- % 100 Alüminyum Medya
- Yıkanabilir
- Değişik Ölçülerde Yapılabilir

Uygulamalar :
Ön Filtre Olarak
- Elektrostatik Filtreler
- Mutfak Çıkış Filtresi

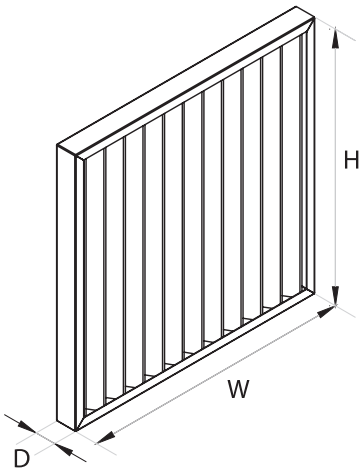

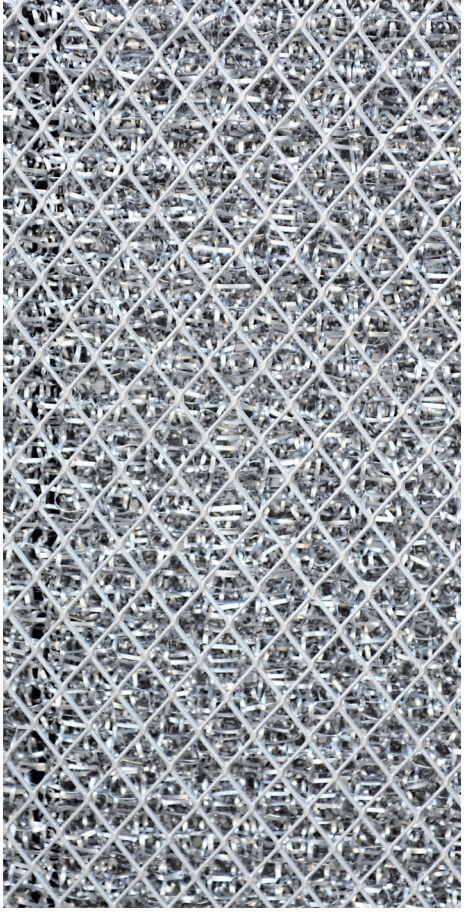

Specifications :
- 100 % Aluminium Media
- Washable
- Various Frame Size and Depths With any Dimensions

Applications :
Pre-Filtration
- All HVAC Units
- Electrostatic Filters
- Kitchen Exhaust

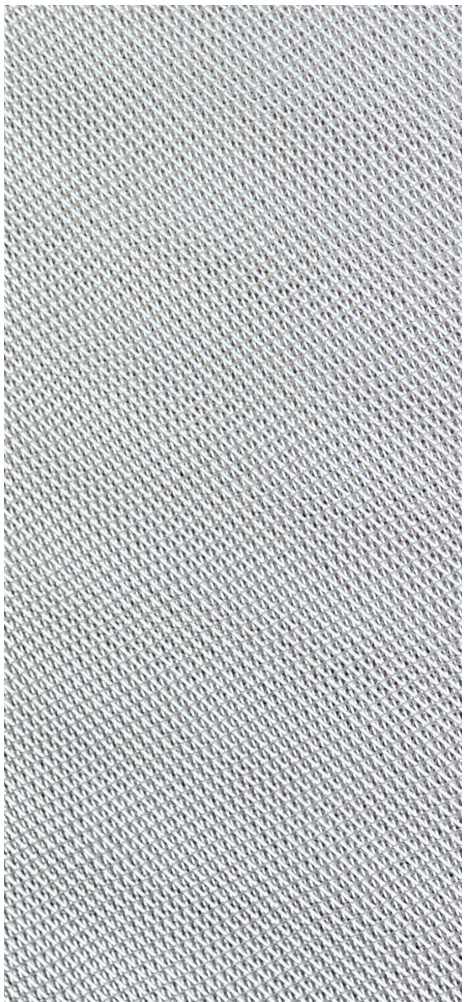

Filter Values
(Acc. to EN 779)

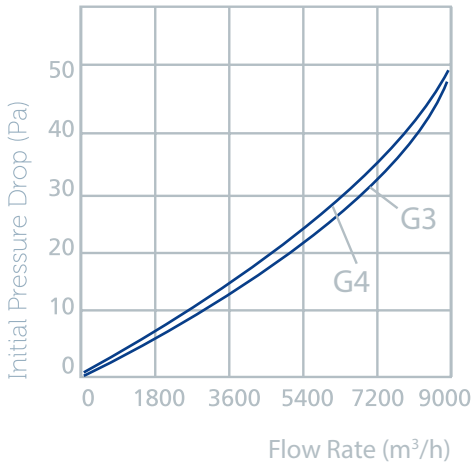

	G3	G4
Av. Arrestance (%)	87,7	92,2
Av. Efficiency	-	-
Final Pressure Drop (Pa)	250	250
Operating Temp. (°C)	80	80
Filter Depth	48	48

TORBA FİLTRELER
BAG FILTERS

G3 / G4 / M5 / M6 / F7 / F8 / F9

Product Code	Filter Class (EN 779)	Dimensions			Pockets	Media Area (m^2)	Air Volume (m^3/h)	Initial Pressure Drop (Pa)
		W (mm)	H (mm)	D (mm)				
B-F6-PP-G-287x592x600-P4	F6	287	592	600	4	2.88	1700	50
B-F6-PP-G-592x592x600-P8	F6	592	592	600	8	5.76	3400	50
B-F7-PP-G-287x592x600-P4	F7	287	592	600	4	2.88	1700	60
B-F7-PP-G-592x592x600-P8	F7	592	592	600	8	5.76	3400	60
B-F8-PP-G-287x592x600-P4	F8	287	592	600	4	2.88	1700	70
B-F8-PP-G-592x592x600-P8	F8	592	592	600	8	5.76	3400	70
B-F9-PP-G-287x592x600-P4	F9	287	592	600	4	2.88	1700	90
B-F9-PP-G-592x592x600-P8	F9	592	592	600	8	5.76	3400	90

B - F7 - PP - G - 592x592x48 - P8

Filter Type:
B: Bag Filter

Filter Class (EN779):
G3 - G4 - M5 - M6 - F7 - F8 - F9

Media Type:
PP: Polypropylene PE: Polyester

Nr of Pockets
P3 --->P12

Width x Height x Depth
(mm) (mm) (mm)

Frame Type:
G : Galvanised P : Plastic

Özellikler :
- Polyester veya Melt Blown Polipropilen
- Yüksek Toz Tutma
- Düşük Fark Basıncı

Uygulamalar :

Ön Filtre Olarak
- Otomotiv Boya Kabinleri
- Hastane Ameliyathane Santralleri
- İlaç Üretimi için Temiz Alan Santralleri
- Enerji Santralleri

Ana Filtre Olarak
- AVM ve Isı Merkezleri Havalandırma Sistemleri

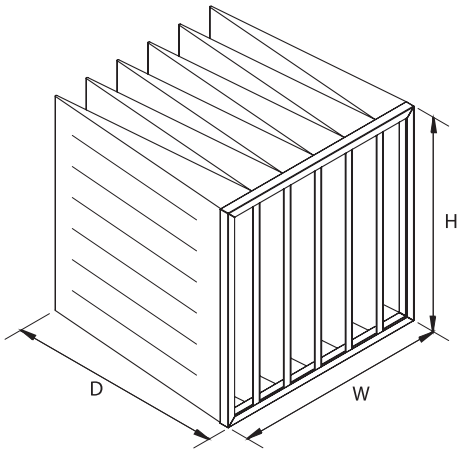

Specifications :
- Polyester or Melt Blown Polypropylene Media
- High Dust Holding Capacity

Applications :

As Main Filter
- Paint Booths in Automotive Industry
- Hospital Operating Room's HVAC Units
- Pharmaceutical Industry
- Power Plants
- Food and Beverage Industry
- HVAC Systems

As Pre Filter
- All Hepa Filter Applications

Filter Values
(Acc. to EN 779)

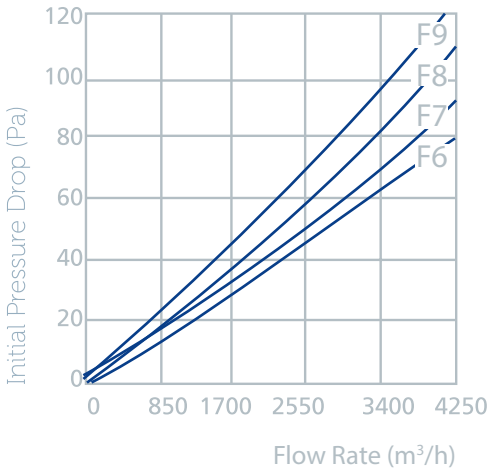

	F5	F6	F7	F8
Av. Arrestance (%)	97,1	98,9	99,8	99,4
Av. Efficiency	48,6	65,5	85,1	91,8
Final Pressure Drop (Pa)	450	450	450	450
Operating Temp. (°C)	80	80	80	80
Filter Depth	600	600	600	600

KOMPAKT FİLTRELER
COMPACT FILTERS

M6 / F7 / F8 / F9

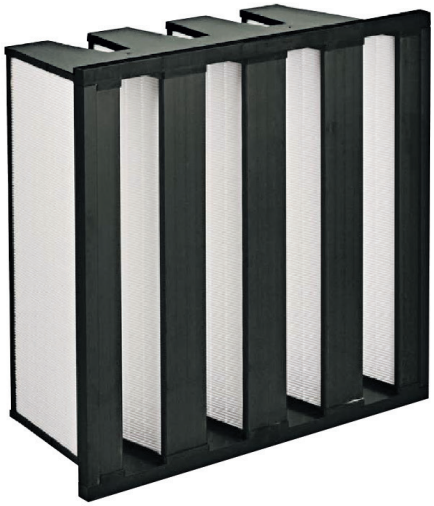

Product Code	Filter Class (EN 779)	Dimensions			Media Area (m^2)	Air Volume (m^3/h)	Initial Pressure Drop (Pa)
		W (mm)	H (mm)	D (mm)			
C-M6-287x592x292	M6	287	592	292	9	1700	60
C-M6-592x592x292	M6	592	592	292	18	3400	60
C-F7-287x592x292	F7	287	592	292	9	1700	65
C-F7-592x592x292	F7	592	592	292	18	3400	65
C-F8-287x592x292	F8	287	592	292	9	1700	100
C-F8-592x592x292	F8	592	592	292	18	3400	100
C-F9-287x592x292	F9	287	592	292	9	1700	125
C-F9-592x592x292	F9	592	592	292	18	3400	125

C-F9-592x592x292

Filter Type:
C: Compact Filter

Filter Class (EN779):
M6 - F7 - F8 - F9

Width x Height x Depth
(mm) (mm) (mm)

Özellikler :

- Filtre Malzemesi: Cam Elyaf
- Silikonsuz Yapı
- Plastik Çerçeve
- Sızdırmaz
- Arttırılmış Filtre Yüzeyi
- Çevreye ve Sağlığa Zararsız
- Sağlam Kompakt Yapı

Uygulamalar :

Ana Filtre Olarak

- Otomotiv Boya Kabinleri
- Hastane Ameliyathane Santralleri
- İlaç Endüstrisi Temiz Alan Santralleri
- Enerji Santralleri
- Gıda Endüstrisi

Ön Filtre Olarak

- Tüm Hepa Filtre Uygulamaları

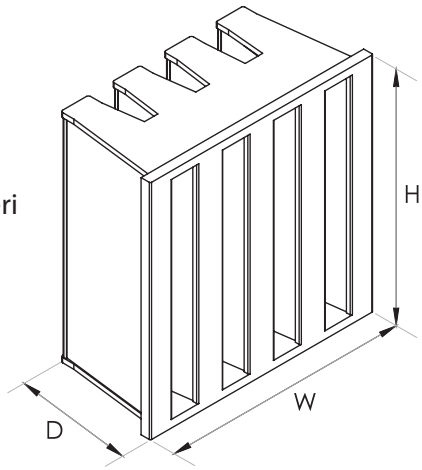

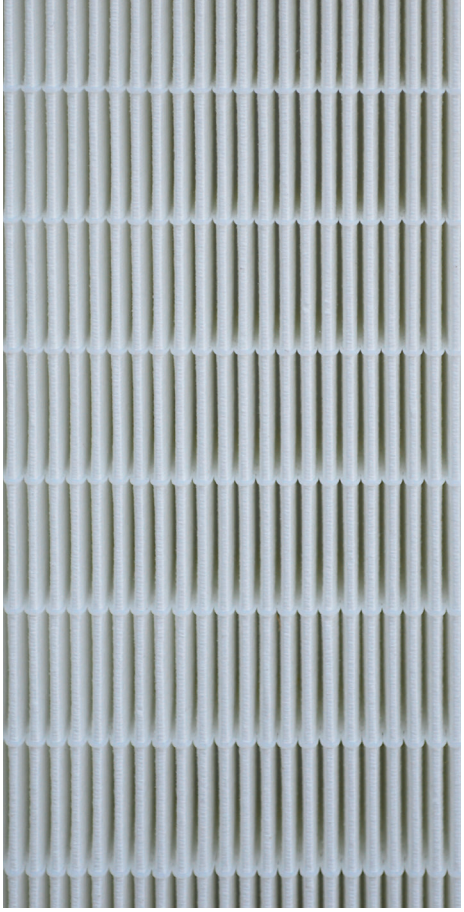

Specifications :

- Glass Fiber Filter Media
- Absolutely Silicone Free
- Plastic Frame
- Sealed
- Large Filter Surface
- Incinerable
- Compact and Durable

Applications :

As Main Filter

- Paint Booths in Automotive Industry
- Hospital Operating Room's HVAC Units
- Pharmaceutical Industry
- Power Plants
- Food and Beverage Industry
- Higher Air Flow Applications

As Pre Filter

- All Hepa Filter Applications

Filter Values
(Acc. to EN 779)

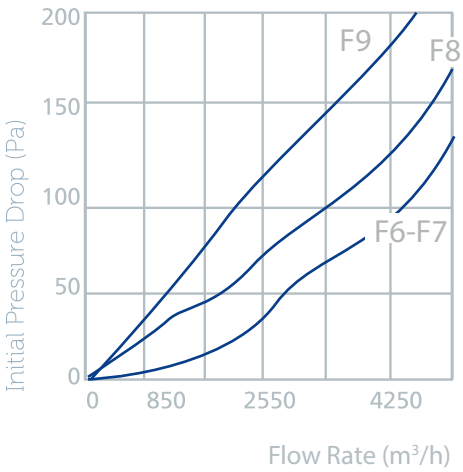

	F6	F7	F8	F9
Av. Arrestance (%)	>99	>99	>99	>99
Av. Efficiency	72	85,9	90	97,5
Final Pressure Drop (Pa)	450	450	450	450
Operating Temp. (°C)	70	70	70	70
Filter Depth	292	292	292	292

MDF HEPA FİLTRELER
MDF HEPA FILTERS

E10 / E11 / E12 / H13 / H14

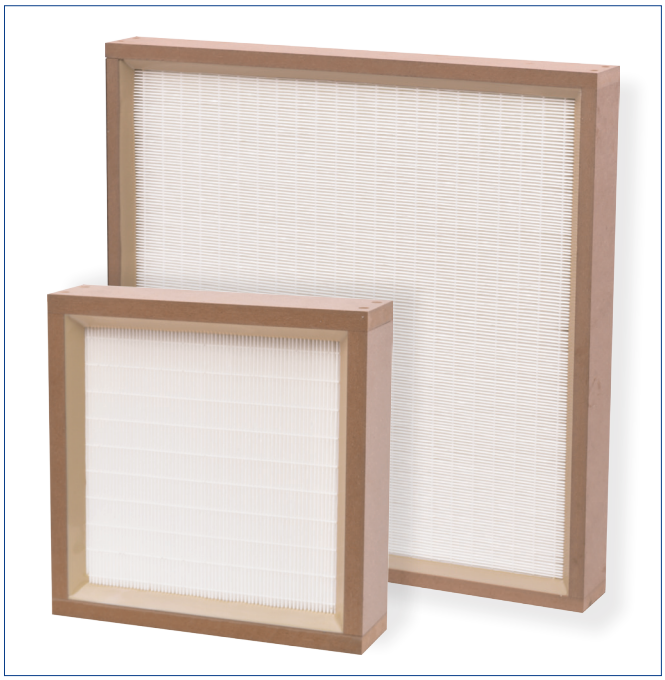

Product Code	Filter Class (EN 1822)	Dimensions			Pleat (mm) Height	Filtration Area (m^2)	Air Volume (m^3/h)	Initial Pressure Drop (Pa)
		W (mm)	H (mm)	D (mm)				
HMD-H13-305x305x78-PH50-PU	H13	305	305	78	50	2,3	150	100
HMD-H13-457x457x78-PH50-PU	H13	457	457	78	50	5,1	340	100
HMD-H13-575x575x78-PH50-PU	H13	575	575	78	50	8,0	535	100
HMD-H13-610x610x78-PH50-PU	H13	610	610	78	50	9,0	600	100
HMD-H14-305x305x78-PH50-PU	H14	305	305	78	50	2.4	150	125
HMD-H14-457x457x78-PH50-PU	H14	457	457	78	50	5,3	340	125
HMD-H14-575x575x78-PH50-PU	H14	575	575	78	50	8,4	535	125
HMD-H14-610x610x78-PH50-PU	H14	610	610	78	50	9,4	600	125

HMD - H13 - 610x610x78 - PH50 - PU

Filter Type:
HMD: MDF Frame Hepa

Filter Class (EN1822):
E10 - E11 - E12 - H13 - H14

Width x Height x Depth
(mm) (mm) (mm)

Pleat Height:
50mm 75mm 90mm 125mm
65mm 85mm 100mm

Gasket Type:
PU: Polyurethane EP: EPDM

Özellikler :
- Yüksek Verimlilik
- Glass Fiber
- Hot Melt Teknolojisi
- Kesintisiz Conta
- Yüksek Hava Debisinde Dayanım

Uygulamalar :
- Hastaneler
- İlaç Üretim Alanları
- Temiz Odalar
- Mikrobiyoloji Laboratuvarları
- Gıda Endüstrisi
- Yarı İletken Üretim Alanları
- Nükleer Enerji Santralleri

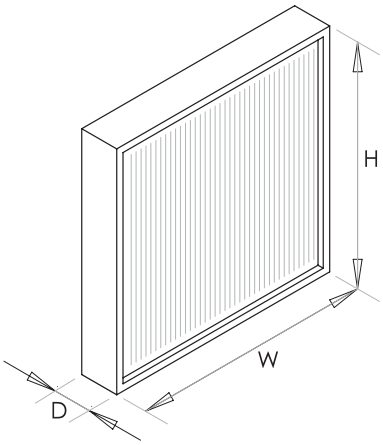

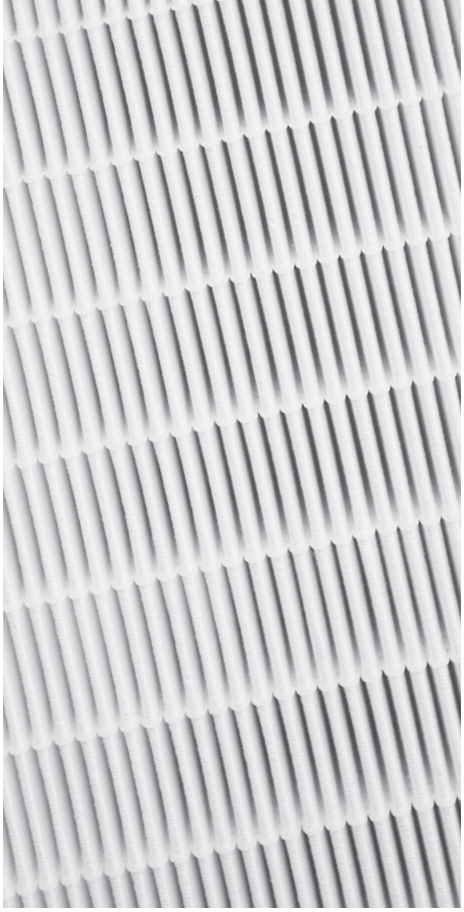

Specifications :
- Submicron Micro-Glass Fibres
- Hot Melt Technology
- One-Piece Gasket
- High Mechanical Stability

Applications :
- Medicine
- Pharmaceutical Industry
- Clean Rooms
- Microbiology
- Food, Bottled Water and Juice Industry
- Nuclear Power Techniques

Filter Values
(Acc. to EN 1822)

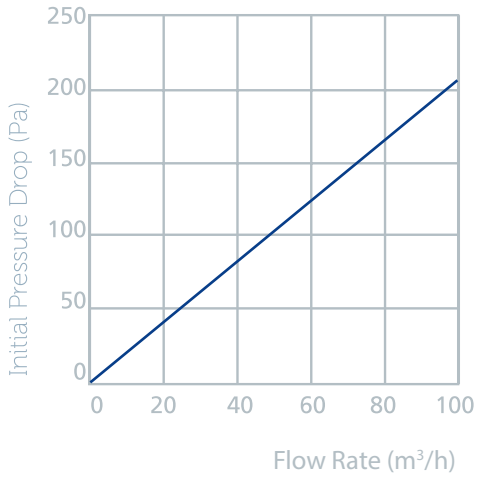

	E11	H13
Av. Arrestance (%)	>99	>99
Av. Efficiency	>95,0	>99,95
Final Pressure Drop (Pa)	750	750
Operating Temp. (°C)	80	80
Filter Depth	46/54/78	292
+ Gasket	+8	+8

ALÜMİNYUM HEPA FİLTRELER
ALUMINIUM HEPA FILTERS

E10 / E11 / E12 / H13 / H14

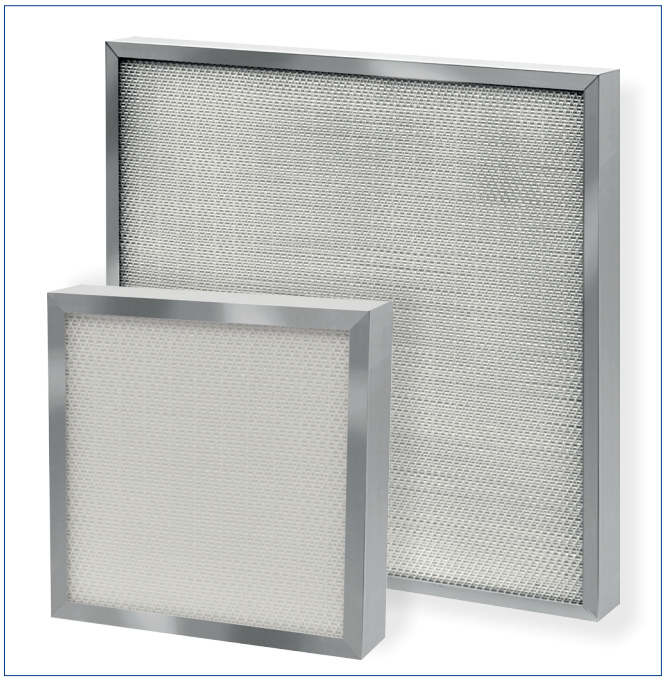

Product Code	Filter Class (EN 1822)	Dimensions			Pleat (mm) Height	Filtration Area (m^2)	Air Volume (m^3/h)	Initial Pressure Drop (Pa)
		W (mm)	H (mm)	D (mm)				
HAL-H13-305x305x69-PH50-PU-F1	H13	305	305	69	50	2,3	150	100
HAL-H13-457x457x69-PH50-PU-F1	H13	457	457	69	50	5,1	340	100
HAL-H13-575x575x69-PH50-PU-F1	H13	575	575	69	50	8,0	535	100
HAL-H13-610x610x69-PH50-PU-F1	H13	610	610	69	50	9,0	600	100
HAL-H14-305x305x69-PH50-PU-F1	H14	305	305	69	50	2.4	150	125
HAL-H14-457x457x69-PH50-PU-F1	H14	457	457	69	50	5,3	340	125
HAL-H14-575x575x69-PH50-PU-F1	H14	575	575	69	50	8,4	535	125
HAL-H14-610x610x69-PH50-PU-F1	H14	610	610	69	50	9,4	600	125

HAL - H14 - 610x610x69 - PH50 - PU - F1

Filter Type
HAL: Alu. Frame Hepa

Filter class (EN 1822)
E10 - E11 - E12 - H13 - H14

Width x Height x Depth
(mm) (mm) (mm)

Pleat Height:
50mm 75mm 90mm 125mm
65mm 85mm 100mm

Gasket Type:
PU: Polyurethane EP: EPDM

Faceguard:
0: Without
1: One Side
2: Two Side

METAL HEPA FİLTRELER
METAL HEPA FILTERS

E10 / E11 / E12 / H13 / H14

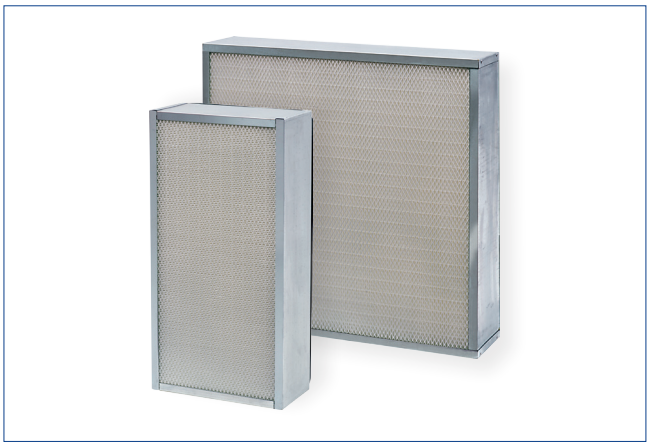

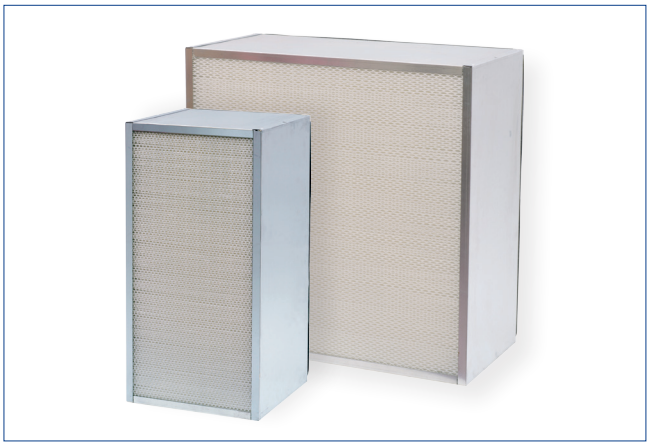

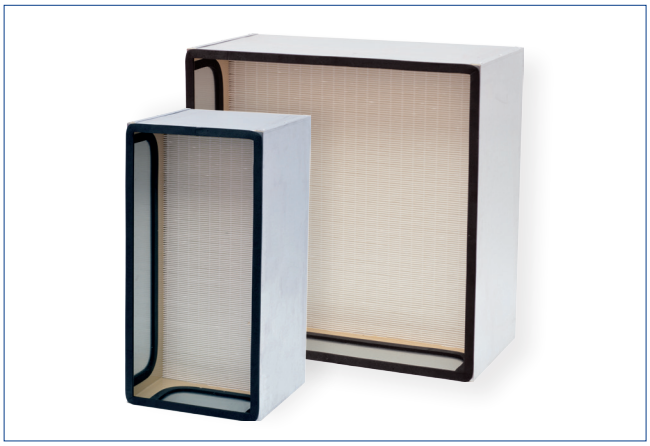

Product Code	Filter Class (EN 1822)	Dimensions			Pleat (mm) Height	Filtration Area (m^2)	Air Volume (m^3/h)	Initial Pressure Drop (Pa)
		W (mm)	H (mm)	D (mm)				
HMT-H13-G-305x610x292-PH125-PU-F1	H13	305	610	292	125	9,0	1000	240
HMT-H13-G-610x610x292-PH125-PU-F1	H13	610	610	292	125	18,0	2000	240
HMT-H14-G-305x610x292-PH125-PU-F1	H14	305	610	292	125	10,0	1000	250
HMT-H14-G-610x610x292-PH125-PU-F1	H14	610	610	292	125	20,0	2000	250

HMT - H13 - G - 610x610x292 - PH50 - PU - F1

Filter Type:
HMT: Metal Frame Hepa

Filter Class (EN1822):
E10 - E11 - E12 - H13 - H14

Frame Type:
G: Galvanised A:Aluminium S: S.Steel

Width x Height x Depth
(mm) (mm) (mm)

Pleat Height:
50mm 75mm 90mm 125mm
65mm 85mm 100mm

Gasket Type:
PU: Polyurethane EP: EPDM

Faceguard:
0: Without
1: One Side
2: Two Side

JEL CONTALI HEPA FİLTRELER
GEL GASKET HEPA FILTERS

E10 / E11 / E12 / H13 / H14

Product Code	Filter Class (EN 1822)	Dimensions			Pleat (mm) Height	Filtration Area (m^2)	Air Volume (m^3/h)	Initial Pressure Drop (Pa)
		W (mm)	H (mm)	D (mm)				
HG-H13-305x305x80-G-F1	H13	305	305	80	42	2,3	150	100
HG-H13-610x610x80-G-F1	H13	610	610	80	42	9,0	600	100
HG-H14-305x305x80-G-F1	H14	305	305	80	42	2,4	150	125
HG-H14-610x610x80-G-F1	H14	610	610	80	42	9,4	600	125

HG - H13 - 610x610x80 - G - F1

Filter Type:
HG: Gel Gasket Hepa

Filter Class (EN1822):
E10 - E11 - E12 - H13 - H14

Width x Height x Depth
(mm) (mm) (mm)

Gasket Type:
G: Gel Gasket

Faceguard:
0: Without
1: One Side
2: Two Side

V-MODÜL HEPA FİLTRELER
V-MODUL HEPA FILTERS

E10 / E11 / E12 / H13 / H14

Product Code	Filter Class (EN 1822)	Dimensions			Filtration Area (m^2)	Air Volume (m^3/h)	Initial Pressure Drop (Pa)
		W (mm)	H (mm)	D (mm)			
HVM-H13-G-305x610x292-PU1	H13	305	610	292	13,0	1500	250
HVM-H13-G-610x610x292-PU1	H13	610	610	292	26,0	3000	250
HVM-H14-G-305x610x292-PU1	H14	305	610	292	15,0	1500	250
HVM-H14-G-610x610x292-PU1	H14	610	610	292	30,0	3000	250

HVM - H13 - 610x610x292 - G - PU

Filter Type:
HVM: V-Modul Hepa

Filter Class (EN1822):
E10 - E11 - E12 - H13 - H14

Width x Height x Depth
(mm) (mm) (mm)

Frame Type:
G: Galvanised A: Alu. S: S. Steel

Gasket Type:
PU: Polyurethane EP: EPDM

TERMİNAL HOOD HEPA FİLTRELER
TERMINAL HOOD HEPA FILTERS

E10 / E11 / E12 / H13 / H14

Product Code	Filter Class (EN 1822)	Dimensions			Filtration Area (m^2)	Air Volume (m^3/h)	Initial Pressure Drop (Pa)
		W (mm)	H (mm)	D (mm)			
HTH-H13-AL-305x610x125-PH50-A1-Ø160	H13	305	610	125	5,5	300	90
HTH-H13-AL-610x610x125-PH50-A1-Ø160	H13	610	610	125	11,0	600	90
HTH-H14-AL-305x610x125-PH50-A1-Ø160	H14	305	610	125	5,5	300	115
HTH-H14-AL-610x610x125-PH50-A1-Ø160	H14	610	610	125	11,0	600	115

HTH - H14 - AL - 610x610x125 - PH50 - A1 - Ø160

Filter Type: Hepa
HTH: Terminal Hood

Filter Class (EN1822):
E10 - E11 - E12 - H13 - H14

Frame Type:
AL: Aluminium

Width x Height x Depth
(mm) (mm) (mm)

Pleat Height: 50mm 100mm

Adjustable Mechanism:
A1: Yes A2: No

Spigot Diameter :
160mm
200mm 250mm

ALÜMİNYUM HEPA FİLTRELER
ALUMINIUM SEPERATOR HEPA FILTERS

E10 / E11 / E12 / H13 / H14

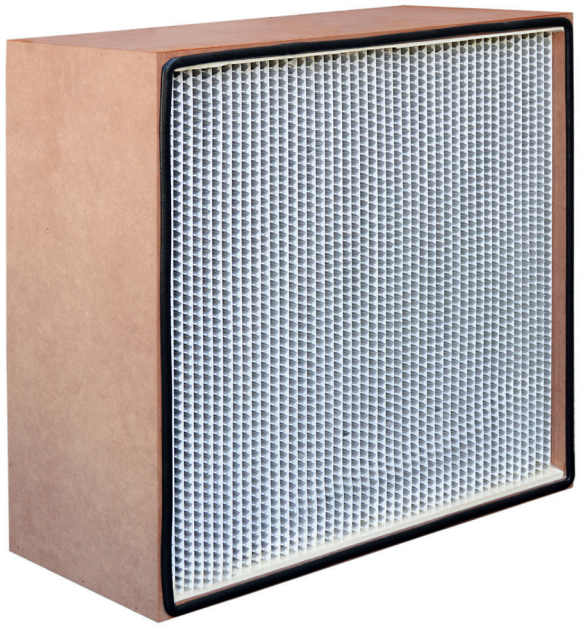

Product Code	Filter Class (EN 1822)	Dimensions			Filtration Area (m^2)	Air Volume (m^3/h)	Initial Pressure Drop (Pa)
		W (mm)	H (mm)	D (mm)			
HAS-H13-305x610x292-G-PU	H13	305	610	292	11,0	1250	250
HAS-H13-610x610x292-G-PU	H13	610	610	292	22,0	2500	250
HAS-H14-305x610x292-G-PU	H14	305	610	292	11,0	1250	250
HAS-H14-610x610x292-G-PU	H14	610	610	292	22,0	2500	250

HAS - H13 - 610x610x292 - G - PU

Filter Type:
HAS: Alu. Separator Hepa

Filter Class (EN1822):
E10 - E11 - E12 - H13 - H14

Width x Height x Depth
(mm) (mm) (mm)

Frame Type:
G: Galvanised A: Alu. S: S. Steel

Gasket Type:
PU: Polyurethane EP: EPDM

AKTİF KARBON KOMPAKT FİLTRELER
ACTIVATED CARBON COMPACT FILTERS

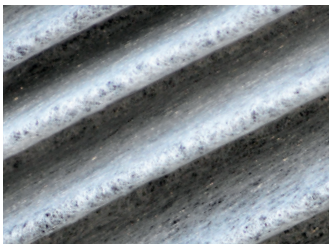

Product Code	Dimensions			Air Volume (m^3/h)	Initial Pressure Drop (Pa)
	W (mm)	H (mm)	D (mm)		
ACC-287x592x292	287	592	292	1700	50
ACC-490x592x292	490	592	292	3000	50
ACC-592x592x292	592	592	292	3400	50

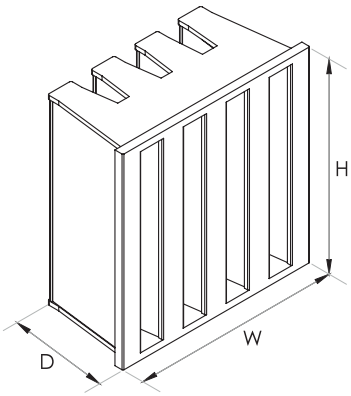

Özellikler :
- Filtre Malzemesi: Sentetik Fiber / Aktif Karbon Kömürü
- Plastik Çerçeve
- Koku Adsorpsiyonu
- 40°C Çalışma Sıcaklığı
- %50 Maksimum Bağıl Nem

Uygulamalar :
- Havaalanları
- Hastaneler
- AVM Restoran Katları
- Koku Problemi Yaşanan Alanlar

Specifications :
- Synthetic Filter Media and Activated Carbon Filter Media
- Plastic Frame
- Odour Adsorption
- Operating Temparature up to 40 °C
- Max 50% Relative Humidity

Applications :
- Airports HVAC Systems
- Hospitals
- HVAC Units in Food Courts or Restaurants

AKTİF KARBON KARTUŞ FİLTRELER
ACTIVATED CARBON CARTRIDGES FILTERS

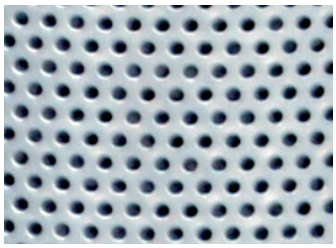

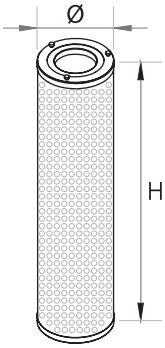

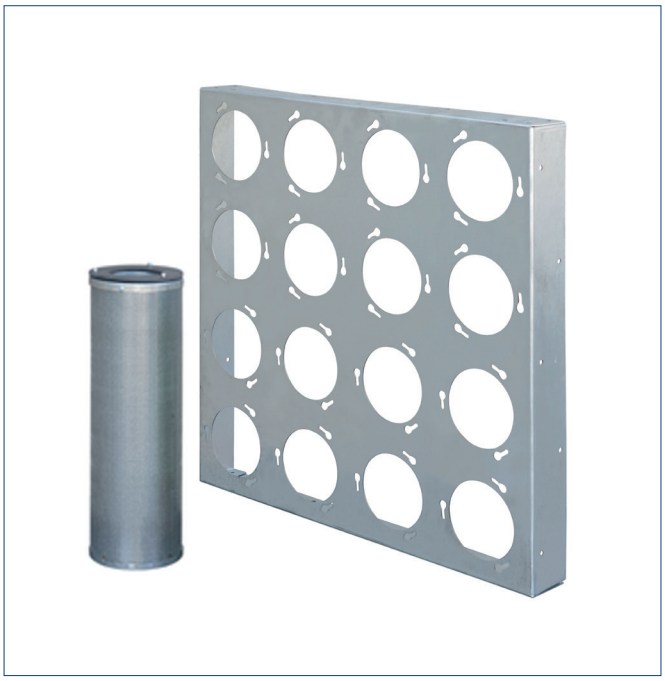

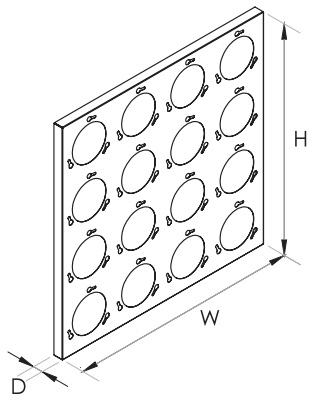

KARTUŞ / CARTRIDGE				ÇERÇEVE / FRAME		
Diameter (Ø)	Lenght (mm)	Air Volume (m^3/h)	Initial Pressure Drop (Pa)	Width (mm)	Height (mm)	Depth (mm)
145	250	200	250	610	610	70
145	450	200	250	305	610	70
145	600	200	250	305	305	70

Özellikler :
- Aktif Karbon Pelet Kömür
- Galvaniz Sac
- Yüksek Koku Adsorbsiyon Kapasitesi
- 3 Noktalı Bayonet Montaj

Uygulamalar :
- Havaalanları
- Hastaneler
- AVM Restoran Katları

Specifications :
- Activated Pellet Carbon
- Galvanised Frame
- 3 Point Bayonet Catch
- Hight Odour Adsorption Capacity

Applications :
- Airports HVAC Systems
- Hospitals
- HVAC Units in Food Courts or Restaurants

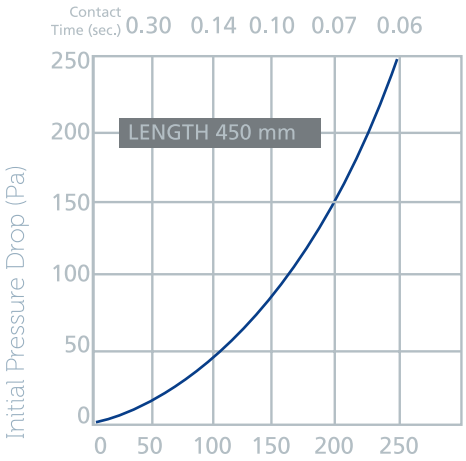

Filter Values (Acc. to EN 779)

Type of Act. Carbon	Miscellaneous	
Lenght (mm)	450	600
Activated Carbon Volume (Lt)	4,0	5,3
Operating Temp. (max °C)	40	40
Activated Carbon Depth (mm)	26	26
Max. Relative Humidity	%70	%70

Weight of Activated Carbon (L=450mm) 2,1kg (3mm Pellet carbon)

SERTİFİKALAR
CERTIFICATES

THE INTERNATIONAL CERTIFICATION NETWORK

CERTIFICATE

IQNet and
DQS GmbH Deutsche Gesellschaft zur Zertifizierung von Managementsystemen
hereby certify that the company

5-M MÜHENDİSLİK MÜMESSİLLİK DANIŞMANLIK SANAYİ VE TİC. LTD. ŞTİ.
HOSAB Hasanağa Organize Sanayi Bölgesi 5. Cad. No:5
Nilüfer BURSA / TURKEY

has implemented and maintains an
Occupational Health and Safety Management System.

Scope:
Design, development, production and sales of industrial filter

Through an audit, documented in a report, it was verified that the management system fulfills the requirements of the following standard:

BS OHSAS 18001 : 2007

Valid from	2017-05-03
Valid until	2020-05-02
Date of certification	2017-05-03

Registration number: DE-31300163 BSOH07

Michael Drechsel
President of IQNet

Frank Graichen
Managing Director of DQS GmbH

IQNet Partners*:
AENOR *Spain* AFNOR Certification *France* AIB-Vinçotte International *Belgium* APCER *Portugal* CCC *Cyprus*
CISQ *Italy* CQC *China* CQM *China* CQS *Czech Republic* Cro Cert *Croatia* DQS Holding GmbH *Germany*
FCAV *Brazil* FONDONORMA *Venezuela* ICONTEC *Colombia* IMNC *Mexico* Inspecta Certification *Finland* INTECO *Costa Rica*
IRAM *Argentina* JQA *Japan* KFQ *Korea* MIRTEC *Greece* MSZT *Hungary* Nemko AS *Norway* NSAI *Ireland* PCBC *Poland*
Quality Austria *Austria* RR *Russia* SIGE *Mexico* SII *Israel* SIQ *Slovenia* SIRIM QAS *International Malaysia*
SQS *Switzerland* SRAC *Romania* TEST SI *Petersburg Russia* TSE *Turkey* YUQS *Serbia*
IQNet is represented in the USA by: AFNOR Certification, CISQ, DQS Holding GmbH and NSAI Inc.

* This attestation is directly linked to the IQNet Partner's original certificate and shall not be used as a stand-alone docume

CERTIFICATE

This is to certify that

5-M MÜHENDİSLİK MÜMESSİLLİK DANIŞMANLIK SANAYİ VE TİC. LTD. ŞTİ.
HOSAB Hasanağa Organize Sanayi Bölgesi 5. Cad. No:5
Nilüfer BURSA / TURKEY

has implemented and maintains an
Occupational Health and Safety Management System.

Scope:
Design, development, production and sales of industrial filter

Through an audit, documented in a report, it was verified that the management system fulfills the requirements of the following standard:

BS OHSAS 18001 : 2007

Certificate registration no.	31300163 BSOH07
Valid from	2017-05-03
Valid until	2020-05-02
Date of certification	2017-05-03

DAkkS Deutsche Akkreditierungsstelle D-ZM-16074-01-00

DQS GmbH

Frank Graichen
Managing Director

Accredited Body: DQS GmbH, August-Schanz-Straße 21, 60433 Frankfurt am Main, Germany
Administrative Office: DQS Denetim ve Belgelendirme Ltd. Şti., Mustafa Kemal Cad. No.66, Hukukçular Towers A Blok, Kat: 6 D: 45, Cevizli - Kartal / Istanbul, Turkey

THE INTERNATIONAL CERTIFICATION NETWORK

CERTIFICATE

IQNet and
DQS GmbH Deutsche Gesellschaft zur Zertifizierung von Managementsystemen
hereby certify that the company

5-M MÜHENDİSLİK MÜMESSİLLİK DANIŞMANLIK SANAYİ VE TİC. LTD. ŞTİ.
HOSAB Hasanağa Organize Sanayi Bölgesi 5. Cad. No:5
Nilüfer BURSA/TURKEY

has implemented and maintains a **Quality Management System.**

Scope:
Design, development, production and sales of industrial filter

Through an audit, documented in a report, it was verified that the management system fulfills the requirements of the following standard:

ISO 9001 : 2015

Valid from	2017-05-03
Valid until	2020-05-02
Date of certification	2017-05-03

Registration number: DE-31300163 QM15

Michael Drechsel
President of IQNet

Frank Graichen
Managing Director of DQS GmbH

IQNet Partners*:
AENOR *Spain* AFNOR Certification *France* AIB-Vinçotte International *Belgium* APCER *Portugal* CCC *Cyprus*
CISQ *Italy* CQC *China* CQM *China* CQS *Czech Republic* Cro Cert *Croatia* DQS Holding GmbH *Germany*
FCAV *Brazil* FONDONORMA *Venezuela* ICONTEC *Colombia* IMNC *Mexico* Inspecta Certification *Finland* INTECO *Costa Rica*
IRAM *Argentina* JQA *Japan* KFQ *Korea* MIRTEC *Greece* MSZT *Hungary* Nemko AS *Norway* NSAI *Ireland* PCBC *Poland*
Quality Austria *Austria* RR *Russia* SIGE *Mexico* SII *Israel* SIQ *Slovenia* SIRIM QAS *International Malaysia*
SQS *Switzerland* SRAC *Romania* TEST SI *Petersburg Russia* TSE *Turkey* YUQS *Serbia*
IQNet is represented in the USA by: AFNOR Certification, CISQ, DQS Holding GmbH and NSAI Inc.

* This attestation is directly linked to the IQNet Partner's original certificate and shall not be used as a stand-alone document

CERTIFICATE

This is to certify that

5-M MÜHENDİSLİK MÜMESSİLLİK DANIŞMANLIK SANAYİ VE TİC. LTD. ŞTİ.
HOSAB Hasanağa Organize Sanayi Bölgesi 5. Cad. No:5
Nilüfer BURSA/TURKEY

has implemented and maintains a **Quality Management System.**

Scope:
Design, development, production and sales of industrial filter

Through an audit, documented in a report, it was verified that the management system fulfills the requirements of the following standard:

ISO 9001 : 2015

Certificate registration no.	31300163 QM15
Valid from	2017-05-03
Valid until	2020-05-02
Date of certification	2017-05-03

DAkkS Deutsche Akkreditierungsstelle D-ZM-16074-01-00

DQS GmbH

Frank Graichen
Managing Director

Accredited Body: DQS GmbH, August-Schanz-Straße 21, 60433 Frankfurt am Main, Germany
Administrative Office: DQS Denetim ve Belgelendirme Ltd. Şti., Mustafa Kemal Cad. No.66, Hukukçular Towers A Blok, Kat: 6 D: 45, Cevizli - Kartal / Istanbul, Turkey

THE INTERNATIONAL CERTIFICATION NETWORK

CERTIFICATE

IQNet and
DQS GmbH Deutsche Gesellschaft zur Zertifizierung von Managementsystemen
hereby certify that the company

5-M MÜHENDİSLİK MÜMESSİLLİK DANIŞMANLIK SANAYİ VE TİC. LTD. ŞTİ.
HOSAB Hasanağa Organize Sanayi Bölgesi 5. Cad. No:5
Nilüfer BURSA / TURKEY

has implemented and maintains an **Environmental Management System.**

Scope:
Design, development, production and sales of industrial filter

Through an audit, documented in a report, it was verified that the management system fulfills the requirements of the following standard:

ISO 14001 : 2015

Valid from	2017-05-03
Valid until	2020-05-02
Date of certification	2017-05-03

Registration number: DE-31300163 UM15

Michael Drechsel
President of IQNet

Frank Graichen
Managing Director of DQS GmbH

IQNet Partners*:
AENOR *Spain* AFNOR Certification *France* AIB-Vinçotte International *Belgium* APCER *Portugal* CCC *Cyprus*
CISQ *Italy* CQC *China* CQM *China* CQS *Czech Republic* Cro Cert *Croatia* DQS Holding GmbH *Germany*
FCAV *Brazil* FONDONORMA *Venezuela* ICONTEC *Colombia* IMNC *Mexico* Inspecta Certification *Finland* INTECO *Costa Rica*
IRAM *Argentina* JQA *Japan* KFQ *Korea* MIRTEC *Greece* MSZT *Hungary* Nemko AS *Norway* NSAI *Ireland* PCBC *Poland*
Quality Austria *Austria* RR *Russia* SIGE *Mexico* SII *Israel* SIQ *Slovenia* SIRIM QAS *International Malaysia*
SQS *Switzerland* SRAC *Romania* TEST SI *Petersburg Russia* TSE *Turkey* YUQS *Serbia*
IQNet is represented in the USA by: AFNOR Certification, CISQ, DQS Holding GmbH and NSAI Inc.

* This attestation is directly linked to the IQNet Partner's original certificate and shall not be used as a stand-alone document

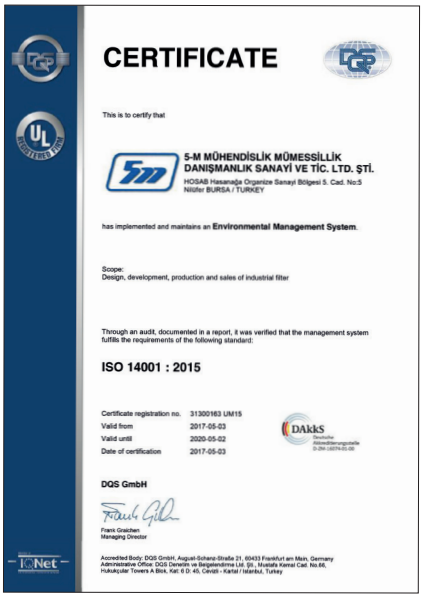

CERTIFICATE

This is to certify that

5-M MÜHENDİSLİK MÜMESSİLLİK DANIŞMANLIK SANAYİ VE TİC. LTD. ŞTİ.
HOSAB Hasanağa Organize Sanayi Bölgesi 5. Cad. No:5
Nilüfer BURSA / TURKEY

has implemented and maintains an **Environmental Management System.**

Scope:
Design, development, production and sales of industrial filter

Through an audit, documented in a report, it was verified that the management system fulfills the requirements of the following standard:

ISO 14001 : 2015

Certificate registration no.	31300163 UM15
Valid from	2017-05-03
Valid until	2020-05-02
Date of certification	2017-05-03

DAkkS Deutsche Akkreditierungsstelle D-ZM-16074-01-00

DQS GmbH

Frank Graichen
Managing Director

Accredited Body: DQS GmbH, August-Schanz-Straße 21, 60433 Frankfurt am Main, Germany
Administrative Office: DQS Denetim ve Belgelendirme Ltd. Şti., Mustafa Kemal Cad. No.66, Hukukçular Towers A Blok, Kat: 6 D: 45, Cevizli - Kartal / Istanbul, Turkey

5M Mühendislik

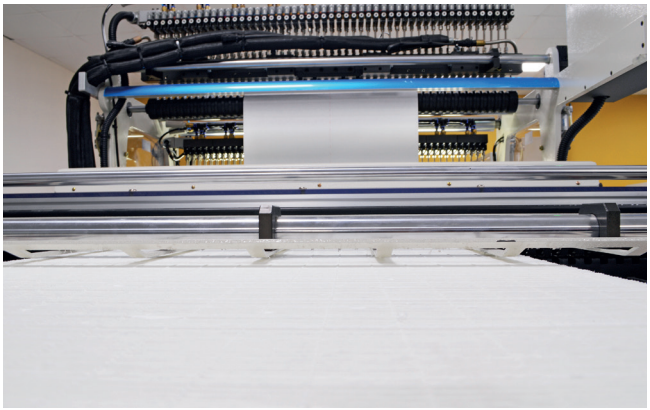

IS BRAND NAME OF 5M MUHENDISLIK LTD. STI.

5M Mühendislik
Mümessillik Danışmanlık Ltd. Şti.

HOSAB Hasanağa Organize Sanayi Bölgesi
5. Cad. No:5 Nilüfer / BURSA / TÜRKİYE

Tel : + 90 224 484 29 20
Faks : + 90 224 484 29 40

www.5m-muhendislik.com.tr
info@5m-muhendislik.com.tr

KOSGEB
www.kosgeb.gov.tr
Bu katalog KOSGEB desteği ile hazırlanmıştır.
Basım Tarihi: Mart 2018

AJANS 801
reklam & matbaa hizmetleri
www.ajans801.com